Extreme Environment Space Power Technology for Terrestrial Use

Motivation and Application Areas

- **Numerous missions to the surface of Venus proposed for next decade**
- **Requires extended operation in high temperature regions (>300° C)**
- **No other technology capable of powering long-lived surface operations**

Technology can be applied to terrestrial uses such as: electric hybrid vehicles, distributed home co-generation/cooling; and quiet recreational vehicle generators

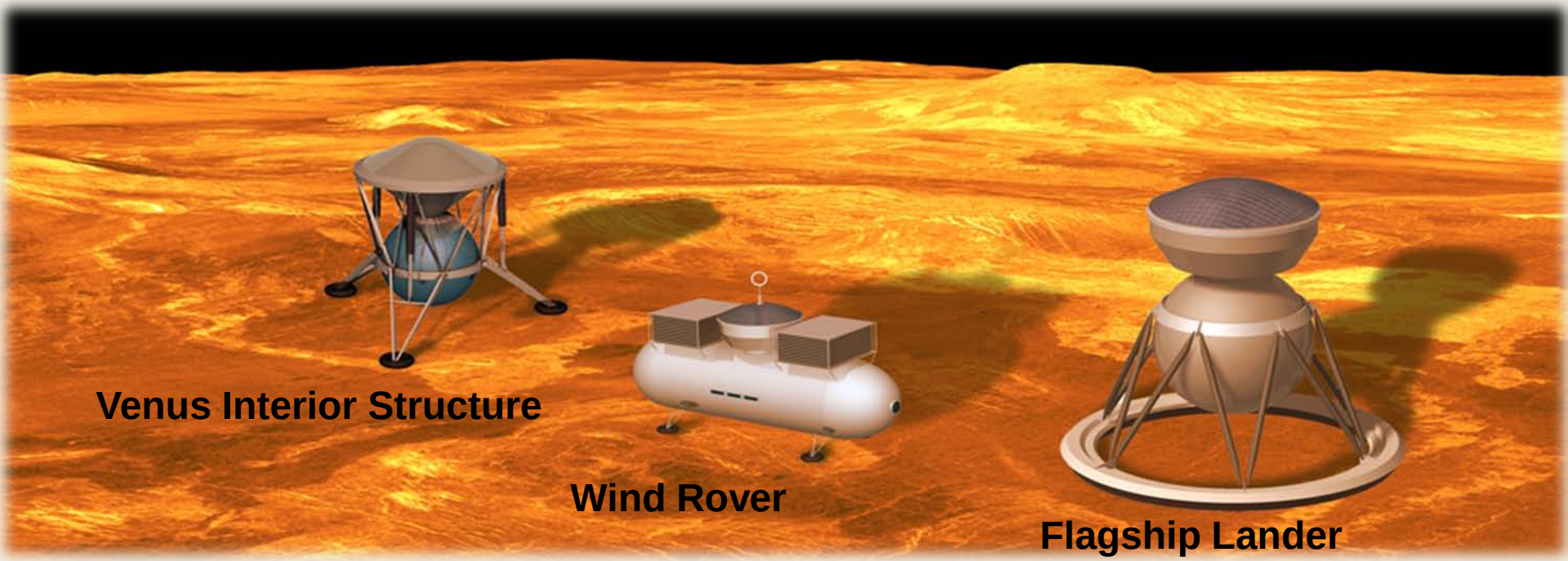

Space Technology Goals

Scope

- Develop the Advanced Stirling Duplex (ASD) to provide power and cooling for long-lived in situ elements on the surface of Venus and other extreme environments.
- Provide 100-400 W_e of power and up to 1100 W_{th} of cooling for spacecraft electronics and sensors.
- Achieve 52% of Carnot power and 44% of Carnot cooling to minimize use of Pu 238.
- Demonstrate technology by 2015 (TRL 6),

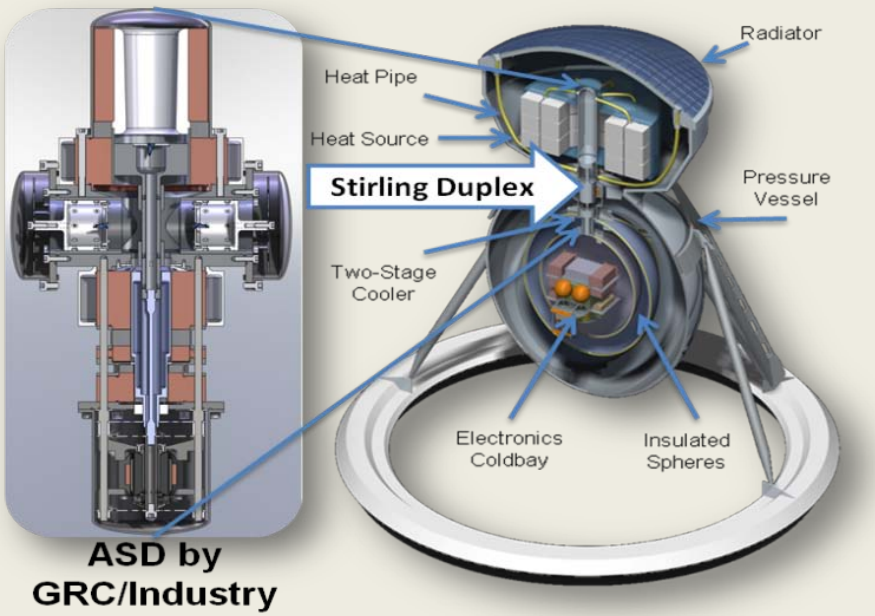

Organization

- GRC research, engineering, and facilities
- Component development at Sierra-Lobo, Lockheed Martin, Sunpower, Gedeon Assoc., Case Western Reserve University, Advanced Cooling Technologies, Cleveland State University
- Requirements definition from Jet Propulsion Laboratory, Goddard Space Flight Center, John Hopkins Applied Physics Lab, SWRI

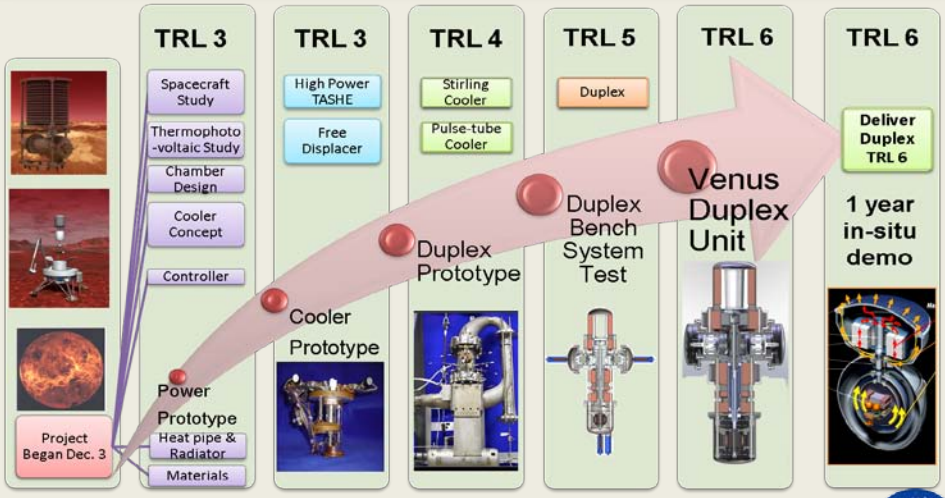

Stirling Convertor Principles of Operation

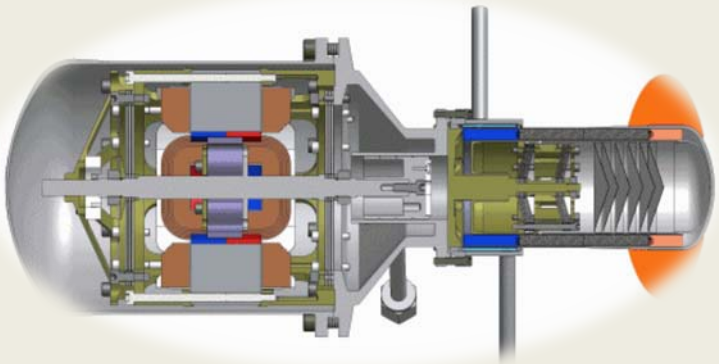

Temperature→

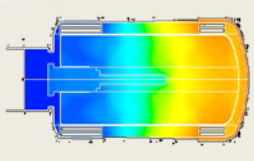

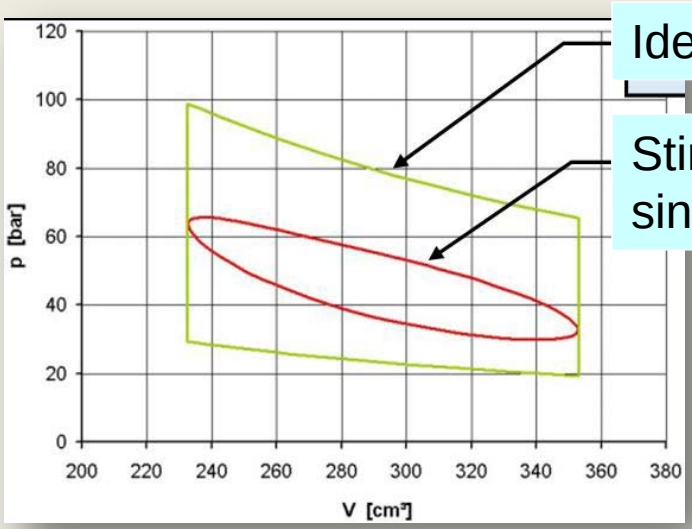

- Robert Stirling's 1816 patent (the first of many) preceded the theoretical work of Carnot by 40 years.
- Requires a heat source and heat sink
- Temperature difference between hot and cold determines efficiency
- Stirling engines are unique heat engines because their theoretical design efficiency approaches the theoretical maximum efficiency possible (known as the Carnot Cycle efficiency).

Electrical Power and Cooling From Single Appliance

- Duplex Basic Principles

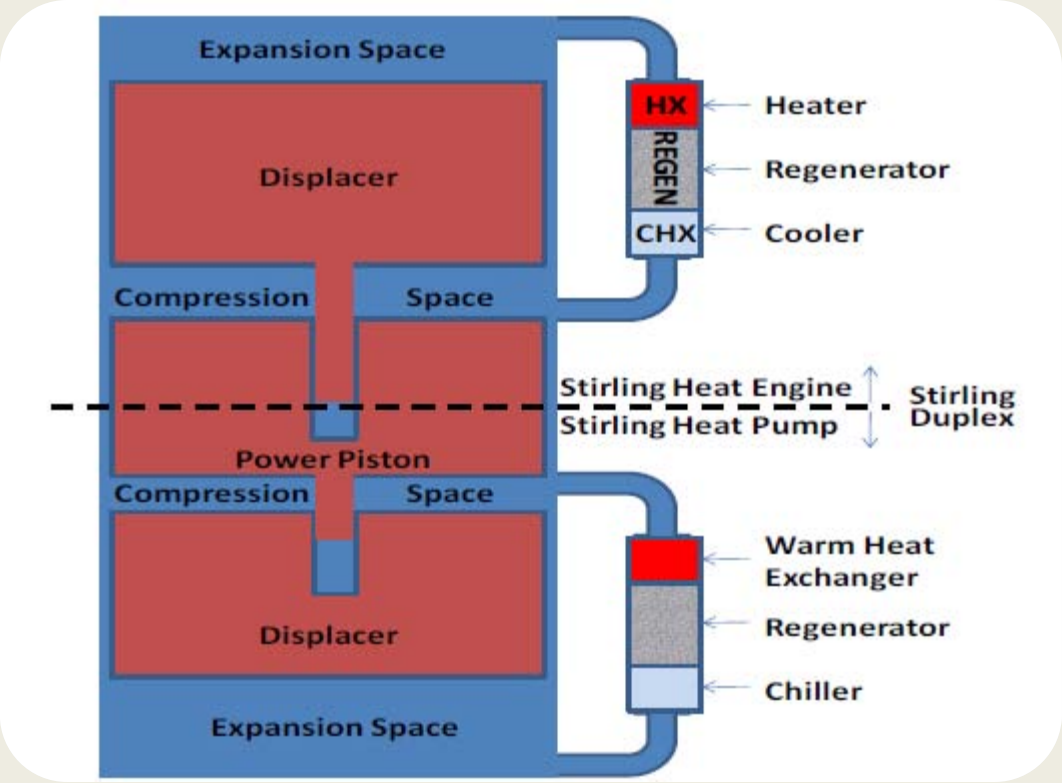

•Free-piston, free-displacer, or thermoacoustic components to get maximum operating temperature

•Stirling beta or pulse tube cooler to get highest heat lift efficiency

•Linear alternator embedded somewhere on cold side to keep magnet temperatures down.

Stirling Most Efficient For Both Power and Cooling

Table 1. Power Options

Approach	Efficiency, % $\frac{T_{hot}}{T_{cold}} = \frac{1123K}{773K}$
Free-Piston Stirling	17
Free-Displacer Stirling	15
Thermoacoustic Stirling	13
Brayton/Rankine	11
Thermoelectric (Segmented)	3-4
Solar Array	< 1
Beamed Power	< 1
Thermionic	< 1
Battery	-

Table 2. Cooling Options

Approach	Efficiency % of Carnot
Free-Piston Stirling	28
Free-Displacer Stirling	24
Thermoacoustic/Pulse Tube	20
Brayton/Rankine	18
Thermionic	15
Thermoelectric (Segmented)	1
Mixed Refrigerant	-
Phase Change	-

- Duplex is when Table 1 is combined with Table 2 to produce a single unit that provides electrical power and refrigeration.
  - **Stirling based components most efficient**

Challenges

To combine a Stirling heat engine and refrigerator into a long-lived duplex machine with at least two cooling stages.

To achieve a high thermodynamic efficiency that will keep the energy requirements manageable.

To create a complete system design with the multi-stage refrigerator integrated into the Venus platform.

To mitigate potential electromagnetic or mechanical vibration effects.

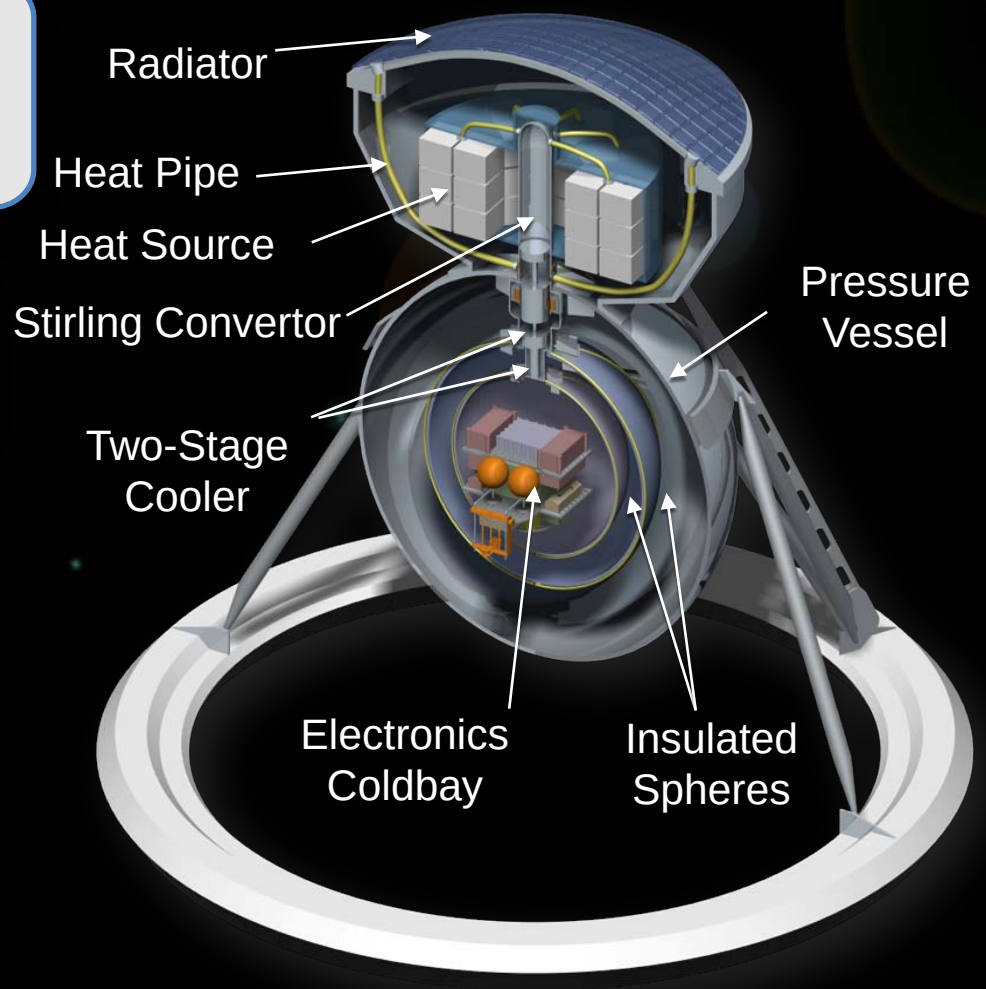

Long-lived Venus lander mission is possible with Stirling duplex technology

Technology Development Path

Missions

SAGE
SWRI
LPI
APL

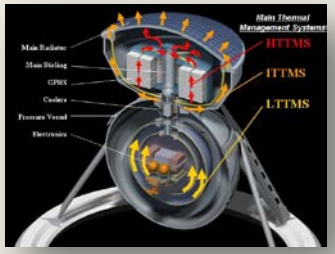

Mobility Lander

Variable Conductance Heat Pipe

Venus Chamber

Products

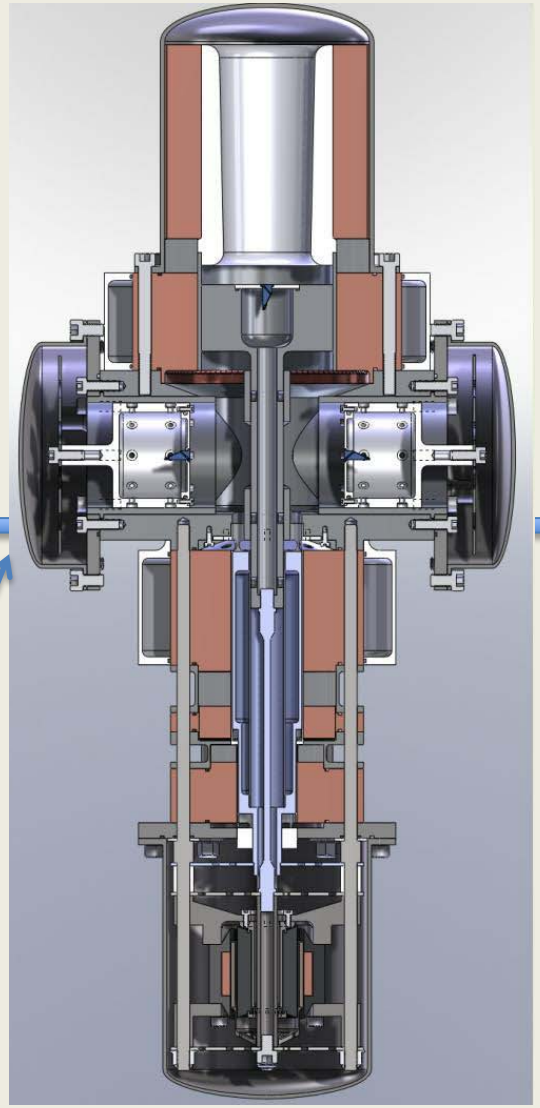

In-house:

- Regenerator
- Displacer
- Heater head
- Controller
- Materials
- Sensors
- Linear alternator
- CFD
- Integration
- Component Rigs
- Chamber
- Bench tests

In-Collaboration:

- Free-displacer
- Free-piston
- Thermoacoustic
- Pulse-tube
- Stirling cooler
- Heat pipe

Stirling Duplex

Component Development

Home Power Generation and Cooling

– *Available for combined electric power and hot water heating*

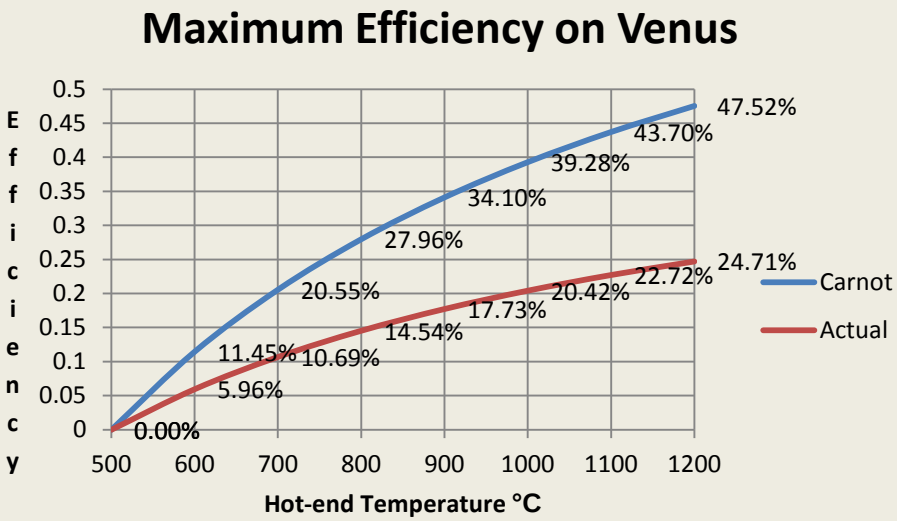

CHP 80% efficient movie -- Ref. Whispergen

Venus conditions require very efficient power convertor

This technology can be used in homes.

Distributed Home Power Generation

Heat Exchanger Hot-end

Power Convertor

Can provide 4000 Watts of electricity for homes with no moving parts. It is 36% efficient and can operate with solar, wood or natural gas

For more information visit:
http://www.grc.nasa.gov/WWW/ASDT

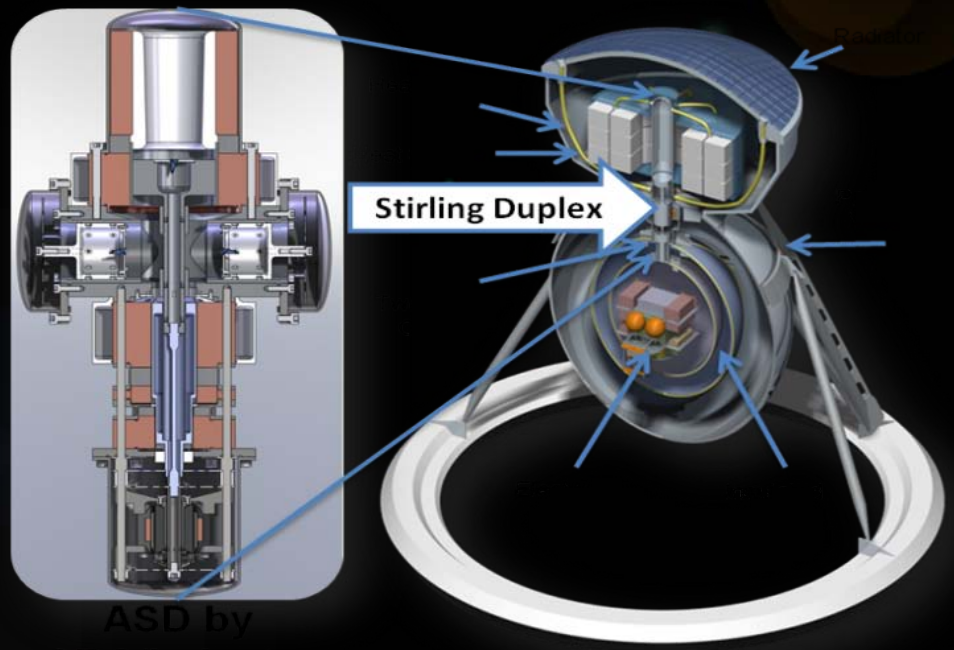

ASD by GRC/Ind

Extreme Environment On Venus

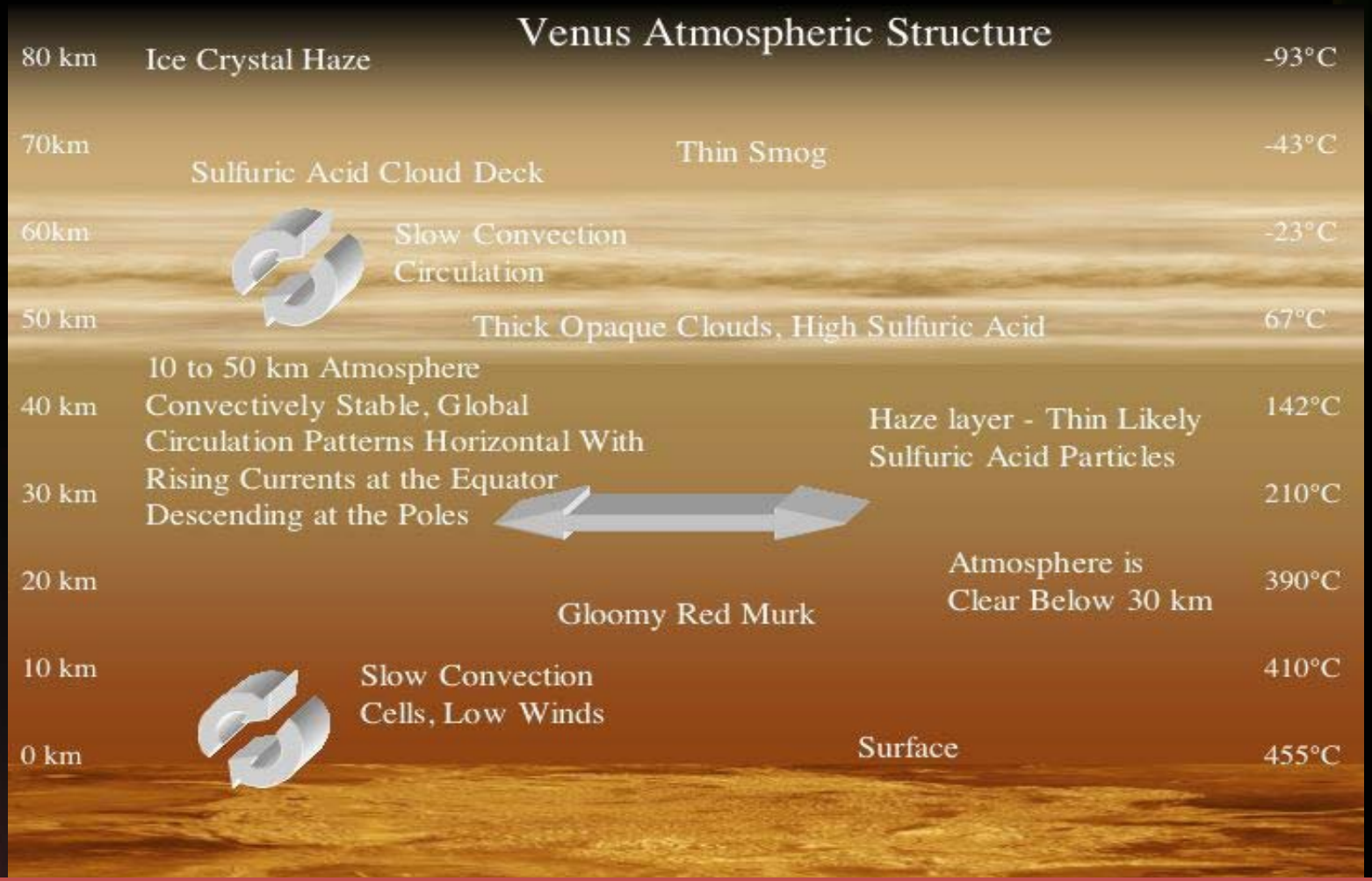

Develop Stirling Duplex for long-lived Venus surface operations